PS-75

Dimensional View

Units: Inches [mm]

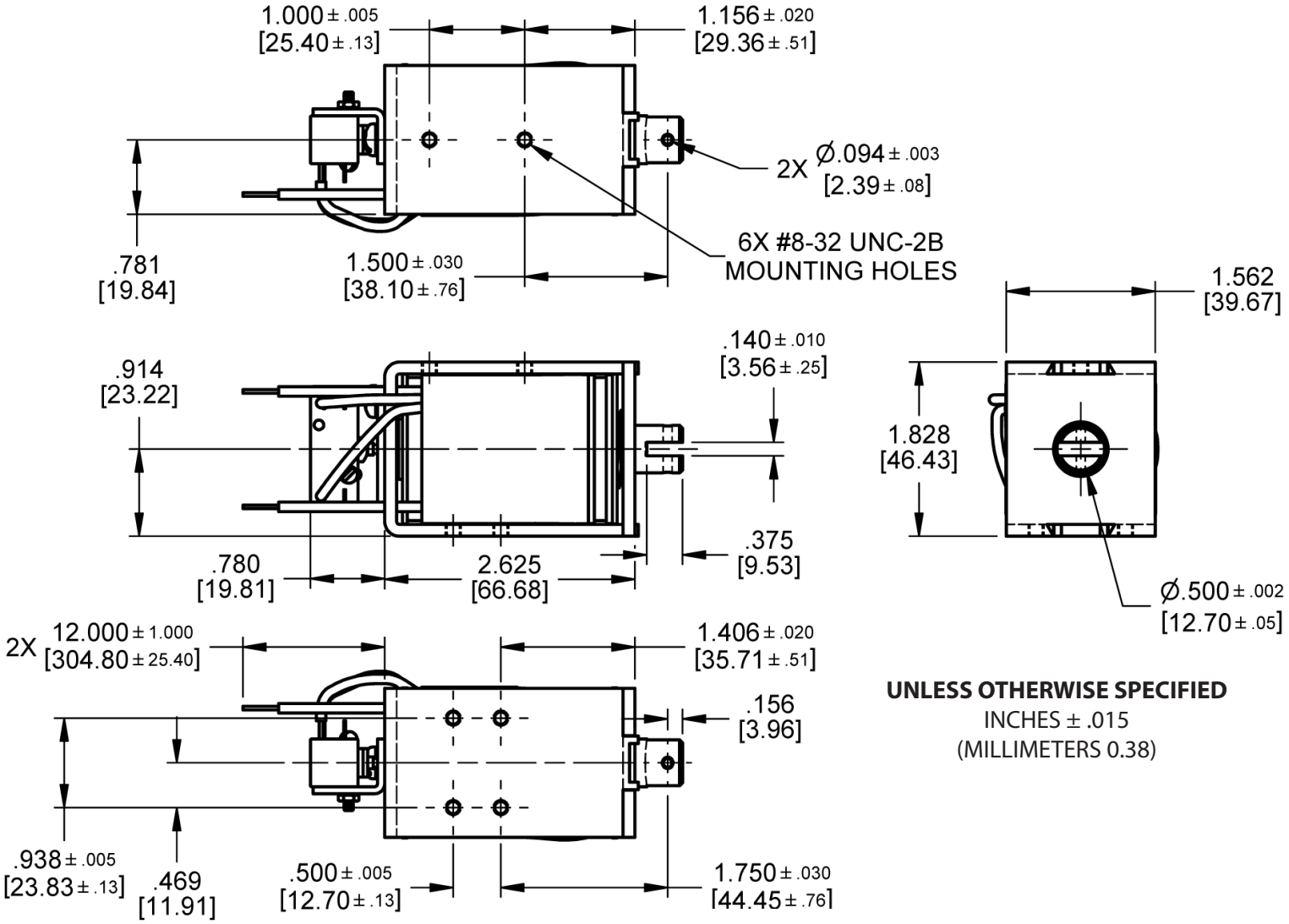

UNLESS OTHERWISE SPECIFIED
INCHES ± .015
(MILLIMETERS 0.38)

©2011 Deltrol Controls - A Division of Deltrol Corp.

2740 South 20th Street Milwaukee, WI 53215 USA | P: 414.671.6800 | F: 414.671.6809 | www.deltrol-controls.com | sales@deltrol.com